Current part is item (21,9) on diagram. Available at www.oshkoshequipment.com

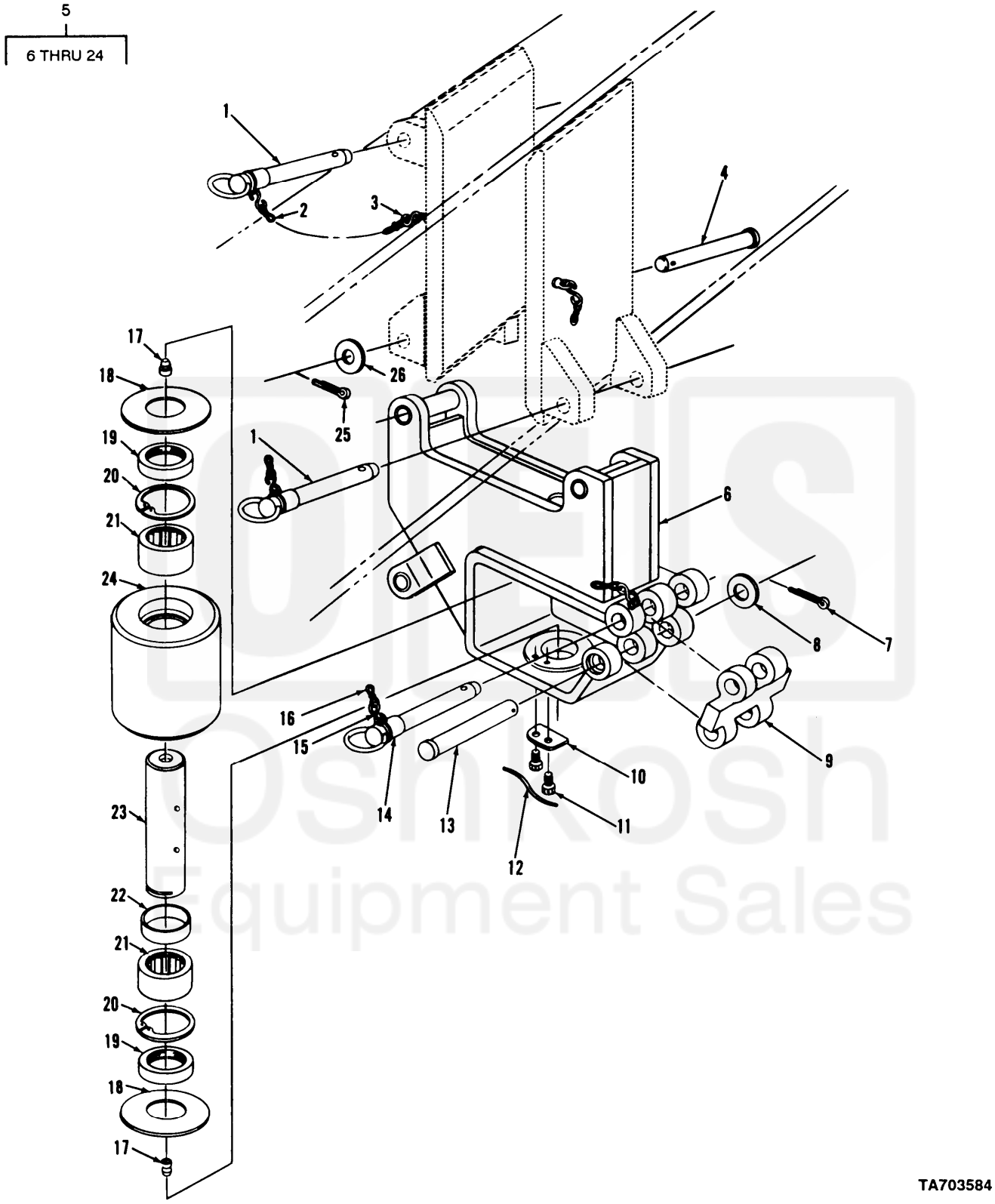

FIGURE 61. SWINGAWAY ROLLER ASSEMBLY AND MOUNTING PARTS.

Current part is item (21,9) on diagram. Available at www.oshkoshequipment.com

Current part is item (21,9) on diagram. Available at www.oshkoshequipment.com

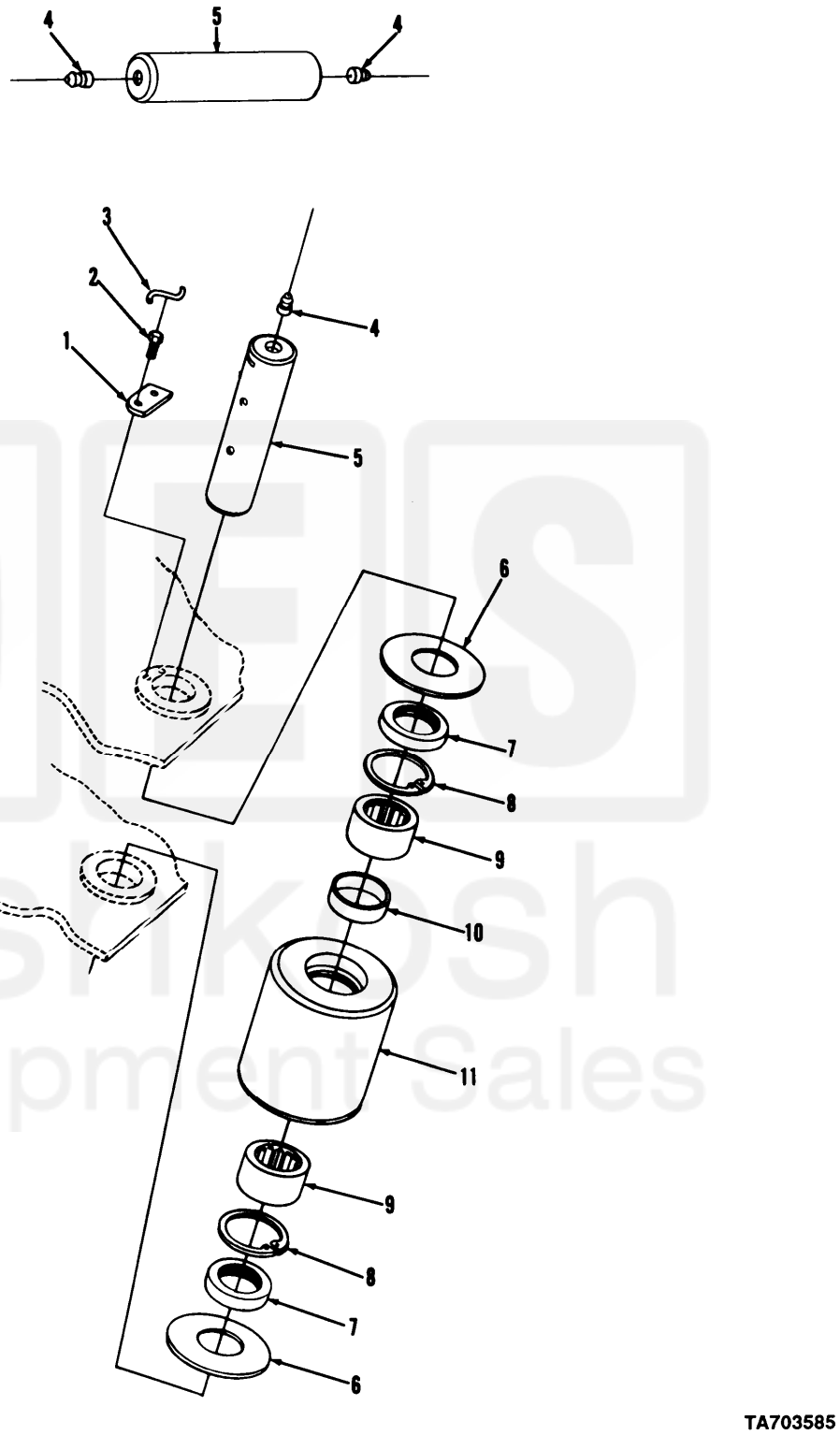

FIGURE 62. GOOSENECK AND PLATFORM ROLLERS.

Current part is item (21,9) on diagram. Available at www.oshkoshequipment.com